Driver Layout

RIA Driver Linac (805 MHz) - SC Resonator Configuration

(configured to compensate for energy loss in the second stripper)

(beta in = .01794c)

Beta	Type	RF Amp (KWS) Watts	Freq (MHz)	Length (cm)	Eacc (MV/m)	Voltage (MV)	Phase deg.	cav/cry (Vincent)	No. Cavities Injector	Middle	Final		No. Cryostats (Vincent) Prototype	Injector	Middle	Final	Cryomodule Cost k$	Total Cost k$
0.021	FORK	500	57.5	18	4	0.62	-30	8	2				1	1	0	0	1162	0
0.030	FORK	500	57.5	26	4	0.90	-30	8	5					-	0	0		
0.062	QWR	500	57.5	20	5	0.87	-30	8	32				1	4	0	0	892	2676
0.128	Spilt-ring	700	115.0	36	4	1.25	-30	8	40				1	5	0	0	1059	4236
0.190	Lollipop	1000	172.5	36	5	1.56	-30	8		72			1	0	9	0	1059	8472
0.380	Spoke	1000	345.0	36	5	1.56	-30	8		96			1	0	12	0	1052	11572
0.490	6 Cell	10000	805.0	55	8.28	3.93	-30	4			76		1	0	0	19	1197	21546
0.610	6 Cell	15000	805.0	68	10.22	6.04	-30	4			84		1	0	0	21	1197	23940
0.810	6 Cell	15000	805.0	91	12.56	9.85	-25	4			28		1	0	0	7	1197	7182
Total Cavities =			435		Section Cavities =				79	168	188			10	21	47		79624
Total Voltage =			1421	(MV)	Section Voltage =				77.6	261.9	1081.4							

K. W. Shepard ANL 6/8/00

SC DRIVER LINAC FOR A RARE ISOTOPE FACILITY

K. W. Shepard[1], J. R. Delayen[2], C. M. Lyneis[3], J. Nolen[1], P. Ostroumov[1], J. W. Staples[3], J. Brawley[2], C. Hovater[2], M. Kedzie[1], M. P. Kelly[1], J. Mammosser[2], C. Piller[2], M. Portillo[1]

Abstract

An ion linac formed of superconducting rf cavities can provide a multi-beam driver accelerator for the production of nuclei far from stability. A multi-beam driver supports a wide variety of production reactions and methods. This paper outlines a concept for a 1.3 GV linac capable of delivering several hundred kilowatts of uranium beam at an energy of 400 MeV per nucleon. The linac would accelerate the full mass range of ions, and provide higher velocities for the lighter ions, for example 730 MeV for protons. The accelerator will consist of an ECR ion source injecting a normally conducting RFQ and four short IH structures, then feeding an array of more than 400 superconducting cavities of six different types, which range in frequency from 58 to 700 MHz. A novel feature of the linac is the acceleration of beams containing more than one charge state through portions of the linac, in order to maximize beam current for the heavier ions. Such operation is made feasible by the large transverse and longitudinal acceptance provided by the large aperture and high gradient which are characteristic of superconducting rf cavities.

1 INTRODUCTION

For more than a decade there has been discussion and study in the North American nuclear physics community concerning the possibility of an advanced facility for generating intense beams of isotopes far from stability [1]. Several years ago, a design concept for such a facility, based on a multi-beam ion accelerator driver was put forward [2,3]. In late 1998, the Nuclear Science Advisory Committee (NuSAC) for the U.S. Department of Energy and the National Science Foundation recommended that construction of a rare-isotope accelerator (RIA) facility be given high priority [4]. More recently, a subcommittee of NuSAC has reviewed technical options for such a facility and recommended that the driver accelerator for such a facility be capable of providing beams of all ions from protons to uranium at energies of at least 400 MeV/nucleon. A further specification is that the driver should be capable of providing 100 kW of beam power initially, and be upgradeable to 400 kW for all ions [5]. This paper outlines a design for a heavy-ion linac capable of meeting these specifications.

2 OVERVIEW OF THE LINAC

Fig. 1 shows a block diagram of the proposed linac, with uranium as the benchmark beam. Parameters of the various sections are detailed in Table 1. For the first 10 MV of the linac normal-conducting accelerating structures can be used, since they can provide adequate performance and are somewhat more cost-effective at the lowest velocities. For the remaining 99% of the linac, however, superconducting (SC) structures have numerous advantages in addition to enabling cost-effective cw operation [6].

The independent phasing intrinsic to a SC cavity array allows the velocity profile to be varied, and enables higher energies for the lighter ions. The present design for a 400 MeV/nucleon uranium linac can also provide 730 MeV protons.

To obtain broad velocity acceptance, the accelerating cavities are necessarily short, allowing the linac to be configured with ample transverse focussing. Also, since SC structures provide high accelerating gradients, strong longitudinal focussing can be obtained by

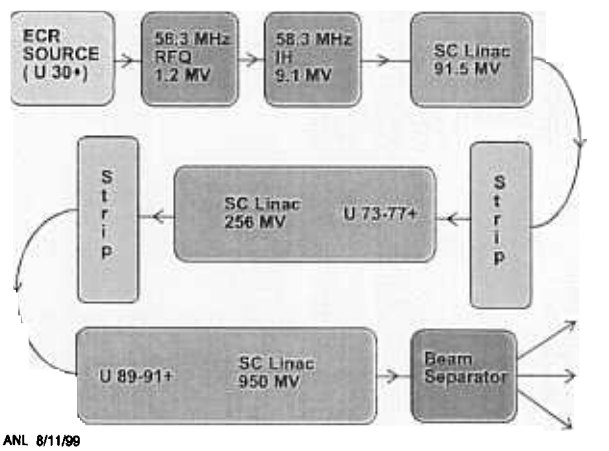

Figure 1: Elements of the proposed linac

[1] Argonne National Laboratory
[2] Jefferson National Accelerator Facility
[3] Lawrence Berkeley National Laboratory

Proceedings of the 9th Workshop on RF Superconductivity, November 1-5, 1999, Santa Fe, New Mexico.

Table Accelerating elements of the benchmark RIA driver linac

Section	Element Type	Beta = v/c	Frequency (MHz)	Temp. (K)	Number of Elements	Section Voltage (MV)
Source	*ECR*	*(Ions from H^{1+} to $^{238}U^{30+}$)*			*2*	0.05
Injector	RFQ	.004 - .017	58.3	293	1	1.2
Injector	IH cavity	.017 - .05	58.3	293	4	9
Injector	2-gap cavity	.05 - .09	58.3	4.5	24	21
Injector	3-gap cavity	.09 - .16	116.6	4.5	57	71
1st Stripper	*Stripper*	*(Lithium film or carbon wheel)*				
Midsection	3-gap cavity	.16 - .3	175	4.5	72	111
Midsection	3-gap cavity	.3 - .4	350	4.5	96	150
2nd Stripper	*Stripper*	*(carbon wheel)*				
Endsection	6-cell cavity	.4 - .54	700	2	60	261
Endsection	6-cell cavity	.54 - .8	700	2	96	684

operating in a phase-focussing mode, such as the synchronous phase of –30 degrees assumed in this work. In this way the SC linac can be configured to provide very strong focussing, insuring that both transverse and longitudinal acceptances are large. For the case considered here, the longitudinal acceptance is ~250 times larger and the transverse acceptance is ~100 times larger than the input beam emittance, which is determined by the ion source and injector RFQ.

As is discussed below, such an immense margin for emittance growth makes entirely feasible a novel operating mode for the linac, in which the beam contains multiple charge-states [7]. By simultaneously accelerating several of the many charge states resulting from stripping the beam, the efficiency of charge stripping is greatly enhanced, since a much higher portion of the stripped beam can be utilized.

Multi-charge-state operation provides not only a substantial increase in the available beam current, typically a factor of four, but also enables the use of multiple strippers, which reduce the size of the linac required for 400 MeV/nucleon beams. An additional benefit of accelerating multiple charge states is a reduction in the amount of beam dumped during charge-state selection at the stripping points, which in turn reduces shielding requirements.

Taking uranium as an example, between the first stripper (12 MeV/n) and second stripper (85 MeV/n) the beam has an average charge state $q_0 = 75$. In this region we can accelerate 5 charge states, which encompass 80% of the incident beam. After the second stripper, 99% of the beam is in four charge states neighbouring q_0=90, all of which can be accelerated to the end of linac.

As discussed below, numerical simulations show such operation to be straightforward, with the consequent increase of longitudinal and transverse emittance well within the linac acceptance. By accelerating multiple-charge-state beams of the heavier ions, the linac described above would be capable of producing intense beams of virtually any stable ion.

3 SOURCE AND INJECTOR SECTIONS

3.1 ECR Ion Source

The heavy-ion driver for RIA begins with a high performance Electron Cyclotron Resonance (ECR) ion source. This type of source is well matched to the driver's requirements for a cw, high charge state ion source capable of ionizing a wide range of elements. The heaviest beam needed for the RIA driver is uranium, which is also the most demanding in terms of ion source performance. The RIA driver accelerator should produce at least 6×10^{12} pps of uranium at 400 MeV/nucleon. The target performance for the source is to produce U^{30+} at an intensity of 4×10^{13} for injection into the RFQ. This is about a factor of 6 greater than the current record intensities, which have been achieved with the AECR-U at Berkeley [8].

To reach these higher current levels will require R&D on a new high magnetic field high frequency

ECR ion source. A possible prototype for this RIA ECR is the VENUS ECR ion source currently under construction at the Berkeley Laboratory. It has superconducting solenoid and sextupole coils to enhance the plasma confinement and also sufficiently high fields to support ECR operation at 28 GHz. The coils are designed to generate a 4 T axial mirror field at injection and 3T at extraction and a radial sextupole field of 2.0 T at the plasma chamber wall.

3.2 Normally-conducting RFQ

A concept for an RFQ has been developed which can operate cw and can accelerate charge states as low as a U^{25+} beam from 5.25 keV/n to 150 keV/n. A frequency of 58.3 MHz matches the SC linac and insures adequate transverse acceptance, 1.25 π mm-mrad normalised (full), to accommodate the emittance expected from the ECR ion source [9].

The RFQ incorporates an internal kick buncher and drift, followed by a transition region prior to the acceleration section. The transition region produces a low longitudinal output (full) emittance, 1π keV/n-nsec. The low output emittance makes multiple-charge-state acceleration further on in the linac straightforward.

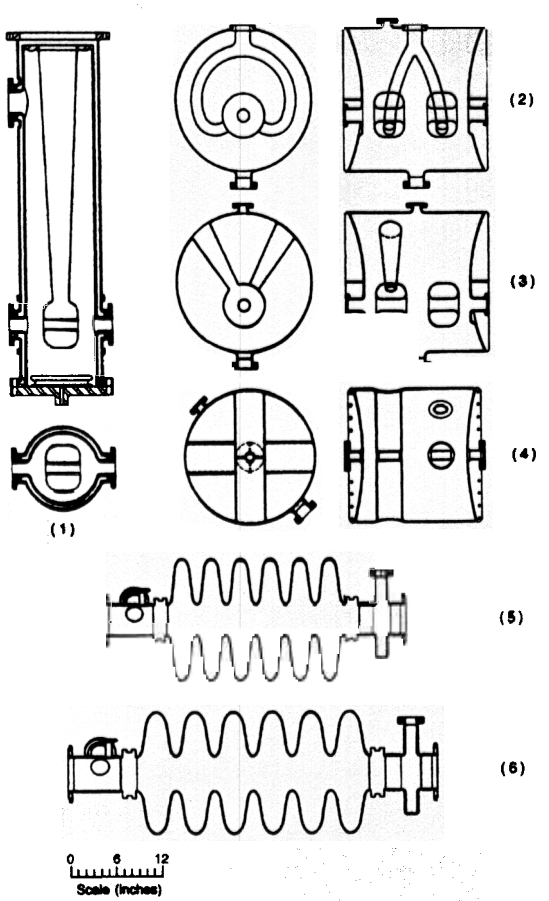

Figure 2: Six cavity types spanning the velocity range $0.04 < \beta = v/c < 1$.

The RFQ will be 4 meters long with an rf power requirement conservatively less than 60 kW. It will use a modified 4-vane configuration with field stabilisers which move the unwanted dipole modes far above the quadrupole mode frequency, reducing assembly tolerances. At 58.3 MHz, 100% duty-factor operation is practical, and the wall power loading is low.

3.3 Normally-conducting IH Section

For an ion energy range from 150 keV/n to about 1.5 MeV/n, inter-digital H-type (IH) structures may be the most cost-effective method for cw operation. Excellent performance in cw or high duty-cycle mode has been proven at several laboratories: Munich Technical Institute, GSI, KEK-Tanashi, and TRIUMF [10]. For IH structures in this velocity range, the optimum frequency is near 60 MHz at 150 keV/n with a higher frequency being desirable at the upper end of the range to increase shunt impedance.

We propose a linac section consisting of four IH tanks with SC solenoids between the tanks. The first two IH tanks would have a frequency is 175/3=58.33 MHz, and the last 2 IH tanks at 350/3=116.7 MHz, to match the following SC linac sections. The use of SC solenoids between the tanks for transverse focusing would maximize the transverse and longitudinal acceptance of this section. The RF power requirement of less than 20 kW/m, is very modest. Also, the solenoids provide a very short transverse focussing element, only 80 mm long for a 10 T field. This minimizes the phase-focussing required in the IH tanks, and helps to maximize the acceptance of this section of the linac.

4 SUPERCONDUCTING SECTIONS

Currently operating SC rf accelerators fall into two classes: velocity-of-light electron linacs, or heavy-ion linacs limited to energies at or below 20 MeV/nucleon. Fortunately for the present application, recent development work has demonstrated the feasibility of extending the velocity range of SC rf structures to cover the intermediate velocity range required by the RIA driver [11,12]. A possible set of SC accelerating structures for a RIA driver are shown in Figure 2. The principle parameters for these cavities are listed in Table 2.

It should be noted that while existing machines and recent development work clearly establish the feasibility of using such a set of cavities, important aspects of the RIA linac can be determined only through prototyping. This must include tests of complete cryomodules to determine, for example, the magnitude of vibration effects and the optimum methods for tuning and phase control. The long lead

Table 2: Parameters for six types of superconducting accelerating structure

Optimum Beta	0.062	0.128	0.19	0.38	0.488	0.64
Type	2 Gap	3 Gap	3 Gap	3 Gap	6 Cell	6 Cell
Frequency (MHz)	58.3	116.7	175	350	700	700
Active Length (cm)	20	36	36	36	63	82
Peak Electric Field - Ep/Ea	4	4.2	4.2	3.8	3.2	2.5
Peak Magnetic Field - Bp/Ea	100	150	150	110	77	62
Geometric Factor QRs	18	28	25	75	120	160
RF Energy (mJ @ 1 MV/m)	120	170	170	170	657	589
Accel. Gradient (MV/m)	5	4	5	5	8	10
Effective Voltage (MV/cavity)	0.87	1.25	1.56	1.56	4.35	7.13
Operating Temp	4.5	4.5	4.5	4.5	2	2

time required, more than two years, makes this activity a critical path in determining the construction schedule for a RIA facility.

4.1 Low-β Accelerator Section

Existing low-β SC drift-tube structures, which for the most part have parameters similar to cavities that are currently used in several SC ion linacs, can be employed for ion velocities up to 0.4 – 0.5 c [13]. For our benchmark RIA driver, four different types of drift-tube structure suffice to cover the velocity range from 0.05 c up to the second stripping point at .4 c or 85 MeV/nucleon. In sequence of velocity, as shown in Figure 2 and Table 2, these cavities are:

A 58 MHz, single drift-tube, coaxial quarter-wave cavity with parameters similar to those employed in several existing linacs. Recently-built, well-maintained cavities achieve on-line the 5 MV/m gradients we assume.

2. A 116 MHz, two drift tube split-ring cavity. This class of cavity has somewhat higher surface magnetic fields than the coaxial quarter-wave, leading to a slightly lower projected gradient., but with two drift tubes provides more voltage per cavity.

3. A 175 MHz, two drift-tube structure that is a hybrid between a half-wave and split-ring structure. This will have a lower surface magnetic field than a split-ring cavity at this frequency. The frequency is, however, somewhat higher than has been employed in two-drift tube structures up to the present time (150 MHz). In order to establish the projected accelerating gradient, 5 MV/m, an early prototype of this cavity type would be prudent.

4. A two-cell, 350 MHz spoke-loaded cavity. Spoke-loaded niobium cavities are well-suited to the velocity range from 0.3 to 0.4 c [13]. The projected gradient has recently been obtained in single-cell cavities of this class [14].

The low-β section of the RIA SC driver linac could be comprised of an array of 248 these four different types of SC niobium cavities. These would be distributed in 31 cryostat modules, with each module containing 8 SC cavities. Transverse focussing would be provided by 10 T, 30 mm bore SC solenoids. The basic linac cell or focussing period would be two cavities followed by a solenoid. Such an array, with the cavities operated at a synchronous phase $\phi = -30°$, would provide strong transverse and longitudinal focussing.

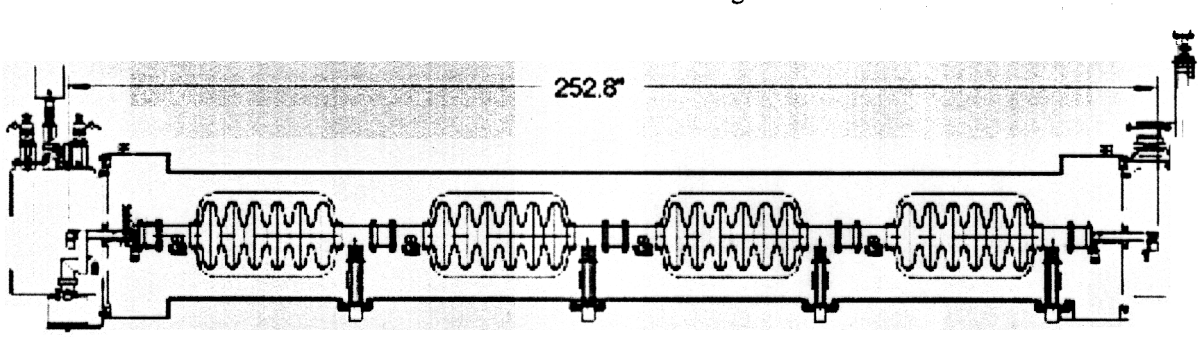

Figure 3: Cryomodule for beta .65 elliptical 6-cell cavities

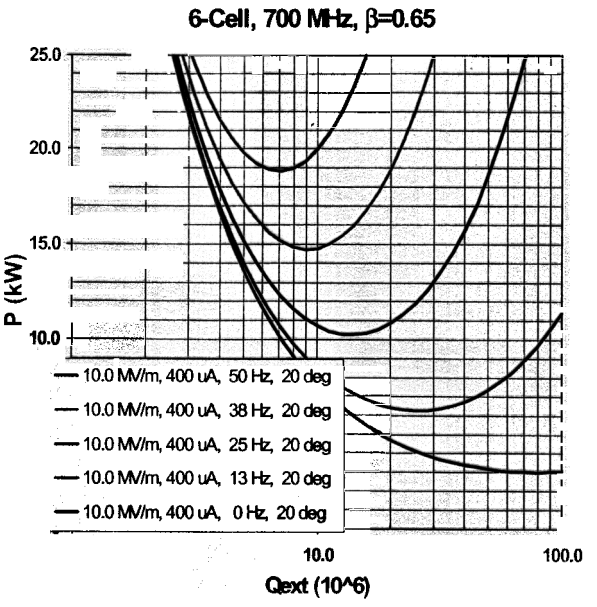

Figure 4: RF power required for phase control in the presence of microphonic frequency noise.

The frequency of all the cavities in the low-β section would be ≤ 350 MHz. In this frequency range the SC surface resistance is sufficiently low to permit economic operation at 4.5 K.

4.2 High-β Accelerator Section

For ion velocities from 0.5 c up, the driver linac would make use of the class of foreshortened elliptical-cell cavities recently tested at JLAB, LANL, and most notably at Saclay, which recently reported accelerating gradients above 20 MV/m in a β = .64, 700 MHz niobium cavity [15]. Note that nearly three-quarters of the total driver voltage is supplied by similar cavities.

The high-β section would consist of 156 SC cavities of two different types, distributed in 39 cryomodules. Each cryomodule would contain 4 SC cavities, and transverse focussing elements would be placed exterior to the cryostats, in the form either of normal-conducting quad triplets or SC solenoids. Both high-β elliptical-cell cavity types will operate at 700 MHz, and thus require 2 K operation.

Because of the relatively low current that will be accelerated, the rf power required to drive the cavities will be dominated by the maximum amount of detuning that will need to be accommodated by the rf control system. This includes both the average frequency offset and the maximum excursion due to microphonics. Figure 4 shows, as a function of external Q, the rf power required to operate and control the b=0.65 cavity at a gradient of 10 MV/m and accelerating 400mA with a phase offset of 20°, with detuning as a parameter, ranging from 0 to 50 Hz.

When the rf power requirement is dominated by microphonics, it increases quadratically with gradient. This makes operation at higher gradients less cost effective, even though the cavities might be capable of such high-gradient operation. For this reason, it may be cost-efficient to limit the assumed operating gradient to 10 MV/m. Even at this gradient, achieving economic performance will require particular attention to the mechanical design of the cavity and the cryostat to limit microphonics to no more than a few Hz rms.

5 PERFORMANCE

5.1 Operation with multiple charge state beams

Operation of the linac with multiple charge state beams is made possible both by the large acceptance of the linac and also by the fact that beams of the heaviest ions are at rather high charge states, so that the fractional difference in charge between neighboring charge states is small. If, for example, we tune the linac for a uranium 75+ beam at a synchronous phase of -30°, then a uranium ion of charge state 76+ can be accelerated simultaneously, with the same velocity profile, at a phase of –31.3°. This small phase shift represents a time difference of only a few picoseconds, so that both charge states easily fit within the stable, linear region of longitudinal phase space throughout the linac.

Such operation has been simulated numerically, using full 3D particle tracking, to study the dynamics of

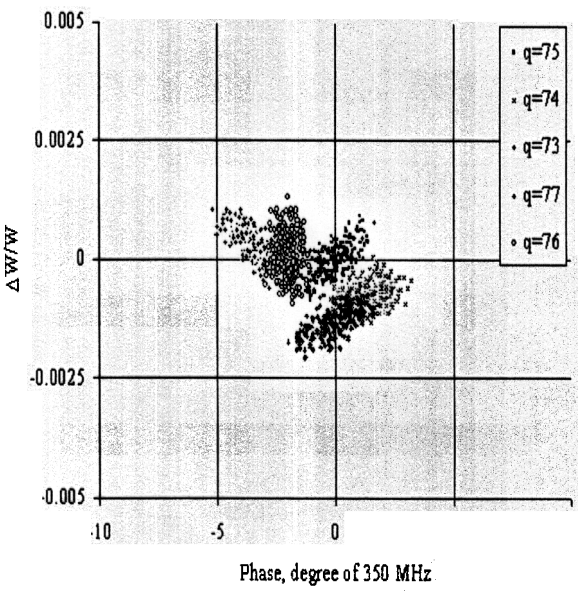

Figure 5: Phase space of a five charge-state uranium beam at 85 MeV/u, just prior to the second stripper.

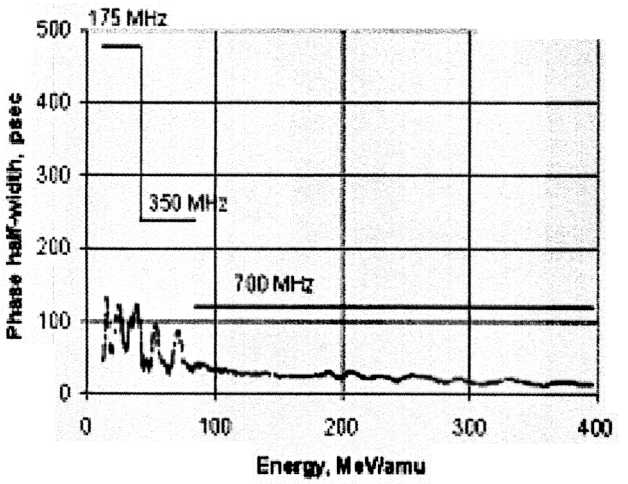

Figure 6: Beam envelope (longitudinal) through the linac for a multiple charge state uranium beam. The beam is shown in red, the linac acceptance in blue.

multiple charge state beams through the proposed RIA driver linac. Some of the results are shown in Figure 5, which details the longitudinal phase space of a uranium beam resulting from acceleration of 5 charge states from the first stripper up to the point just prior to the final stripper, at 85 MeV/nucleon. The phase ellipse for each charge state is clearly discernible, and all five fit within a larger ellipse which represents an effective emittance which is appreciably larger than for a single charge state, but still well within the longitudinal acceptance of the linac.

Figure 6 shows the longitudinal beam envelope for a multiple charge state uranium beam through the entire linac. The beam consists of 5 charge states from the first to the second stripper, and 3 charge states from the second stripper on. The entire beam is at all points well within the longitudinal acceptance, indicating that operation with multiple charge state beams will be straightforward.

5.2 Performance for various ions

Table 3 shows some parameters for beams of various ions from the RIA driver linac. We assume the linac to have sufficient RF power for a 400 kW beam. The stripped charge states are chosen to maximize the output beam current, and the linac is tuned to maximize the energy for each beam. For ions of mass greater than 90, current ECR source performance will not provide sufficient current in a single charge state for 400 kW output beam. For these ions we assume multiple charge state beams from the first stripper on.

Even with the limit of present ECR performance, several hundred kilowatts of beam would be available for nearly all ions: sufficient power to simultaneously feed several production targets. CW beams could be provided to multiple targets by several mechanisms. In the case of beams of several charge states, the different charge states could be separated magnetically. A more general and versatile method would be to use one or more rf beam separators at the linac output.

6 CONCLUSIONS

Current state-of-the-art superconducting cavities can form a highly flexible superconducting linac capable of producing 100 kW, 400 MeV/nucleon beams of any stable isotope from hydrogen to uranium. Such a linac could be the basis for a Rare-Isotope Accelerator (RIA) facility that could provide unprecedented beams of a large, diverse range of nuclei. A modest research and development effort over the next two to three years could significantly impact the cost and performance of cavities and cryomodules for this machine.

7 ACKNOWLEDGEMENTS

Many people have contributed to the development of the concepts described in this paper. The authors would like particularly to thank Hermann Grunder

Table 3: Output beam energies and power for various ions

A	I source	Qout	I out	Energy (MeV/A)	Energy (MeV/A) after $N\,\beta = .65$ cavities			Beam Power
	pμA		pμA	At 2nd stripper	N = 0	N = 48	N = 96	kW
1	548*	1	548	227.9	317.2	575.2	730.8	400
3	218*	2	218	172.5	273.4	474.5	612.2	400
2	379*	1	379	140.4	239.7	402.6	528.1	400
18	54*	8	45	125.4	222.9	369.8	490.9	400
40	24*	18	20	124.6	223.3	371.9	493.8	400
86	10	36	8.5	112.9	209.9	347.6	459.8	336
136	5	54†	3.4	103.7	198.0	326.3	445.3	206
238	1.5	90†	1.0	86.7	172.2	280.9	402.8	100

* Limited by RF power available, † Mean value of multiple charge states

(JLAB), Chair of the ISOL task force, for his redefining the scope of this work and providing much stimulation, Walter Henning (ANL) for his constant and enthusiastic support, Christoph Leeman (JLAB) for his leadership as chair of the recent driver working group, and, finally, the late Mike Nitschke of LBL for his enthusiasm and energy as an early promoter of a North American RIA facility.

This work was supported in part by the U.S. Department of Energy, Nuclear Physics Division.

8 REFERENCES

[1] "Scientific Opportunities with an Advanced ISOL Facility", R. Casten, et al., eds., November 1997. (Available at www.er.doe.gov/production/henp-/isolpaper.pdf)

[2] "Concept for an Exotic Beam Facility based on ATLAS", February 1995. (Available at www.phy.anl.gov/div/origins/yellow-book/index.html)

[3] "Accelerator Development for a Radioactive Beam Facility based on ATLAS", K. W. Shepard, et al., in the Proc. Of the 8th Workshop on RF Superconductivity, Abano, Italy, October 6-10, 1997, 27 (1999).

[4] "Nuclear Science: A Long-range Plan", the DOE/NSF Nuclear Science Advisory Committee, February 1996, (Available at http://pubweb.bnl.-gov/~nsac/)

[5] "ISOL Task Force Information", (Available at http://srfsrv.jlab.org/isol/)

[6] "Physics and Accelerator Applications of RF Superconductivity", H. Padamsee, K. W. Shepard, and R. Sundelin, Annu. Rev. Nucl. Part. Sci. **43**, Pp. 635-686, (1993).

[7] "Multiple-charge Beam Dynamics in an Ion Linac", P.N. Ostroumov and K.W. Shepard, submitted to Physical Review Special Topics – Accelerators and Beams

[8] "Production of highly charged ion beams from electron cyclotron resonance ion sources", Z. Q. Xie, Rev. Sci, Instr. 69, 625 (1998).

[9] J. Staples, in reference [5].

[10] "A Separated Function Drift Tube Linac for the ISAC Project at TRIUMF", R. E. Laxdal, et al., in the Proc. Of the 1997 Particle Accelerator Conference, Vancouver

[11] "Design Considerations for High-current Superconducting Ion Linacs", J. R. Delayen, et al., in Proc. 1993 Particle Accelerator Conference, May 17-20, 1993, Washington D. C., IEEE93CH3279-7, 1715 (1993).

[12] "Medium-Beta Superconducting Cavity Tests at LANL for High-current Proton Accelerators", W. B. Haynes, et al., in the Proc. Of the 8th Workshop on RF Superconductivity, Abano, Italy, October 6-10, 1997, 523 (1999).

[13] "Superconducting Heavy-Ion Accelerating Structures", Kenneth W. Shepard, in Proceedings of the 7th International Conference on Heavy Ion Accelerator Technology, Canberra, Australia, Sept. 18-22, 1995, Nucl. Instr. and Meth. A125 (1996).

[14] "Prototype 350 MHz Niobium Spoke-Loaded Cavities", K. W. Shepard, M. Kedzie, J. R. Delayen, J. Mammosser, C. Piller, in the Proceedings of the 1999 Particle Accelerator Conference, March 29th - April 2nd, 1999, New York City.

[15] H. Safa, in the proceedings of this conference.